Building Division
525 N 3rd Ave, Pasco, WA 99301
P: 509.543.5721
www.pasco-wa.gov | permittech@pasco-wa.gov

PATIO COVERS

RAFTER TAIL ATTACHMENTS NOT ALLOWED

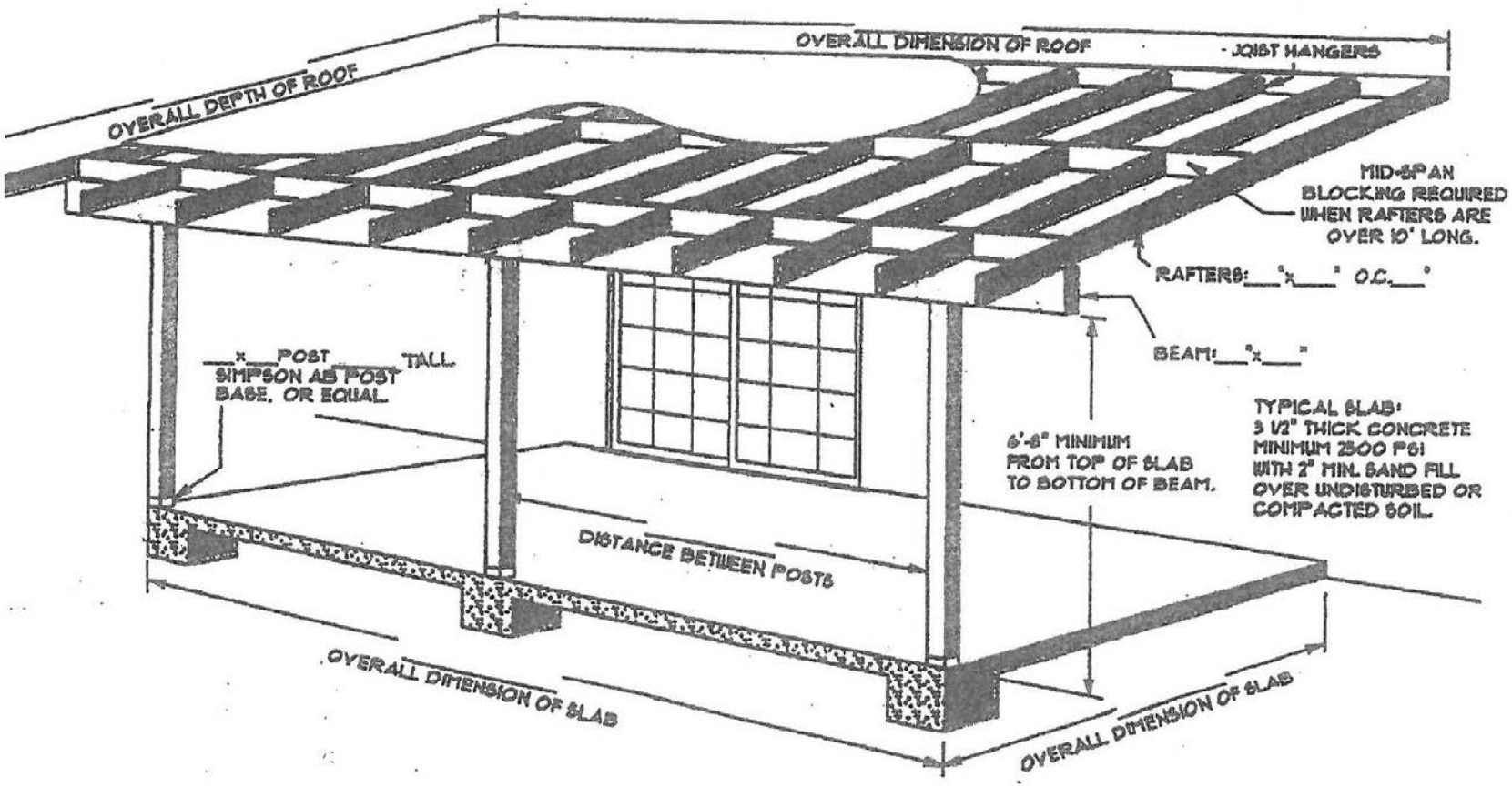

EXPOSED WOOD OR WOOD IN CONTACT WITH SOIL OR CONCRETE SHALL BE PRESSURE-PRESERVATIVE TREATED. R317.1

SEE REVERSE SIDE →

6/2020

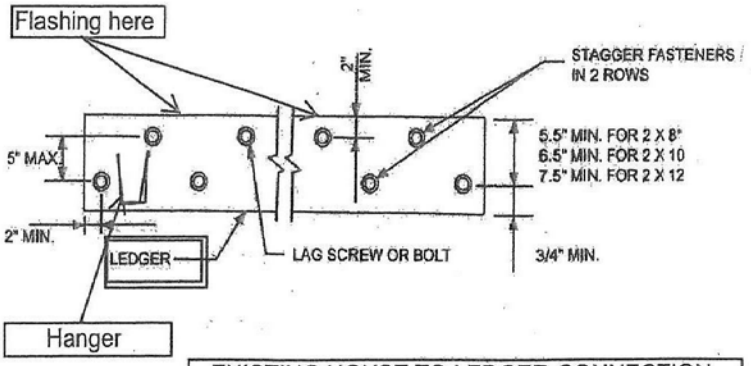

EXISTING HOUSE TO LEDGER CONNECTION

LEDGER CONNECTION WITH GALVANIZED FASTENERS TO EXISTING HOUSE

MINIMUM END AND EDGE DISTANCES AND SPACING BETWEEN ROWS				
	TOP EDGE	BOTTOM EDGE	ENDS	ROW SPACING
Ledger[a]	2 inches[d]	3/4 inch	2 inches[b]	$1^5/_8$ inches[b]
Band Joist[c]	$^3/_4$ inch	2 inches	2 inches[b]	$1^5/_8$ inches[b]

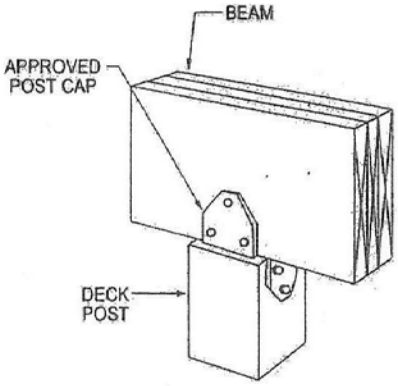

POST TO BEAM CONNECTION

PATIO AND DECK POST

SIZE	MAXIMUM HEIGHT
4 x 4	8'
4 x 6	8'
6 x 6	14'

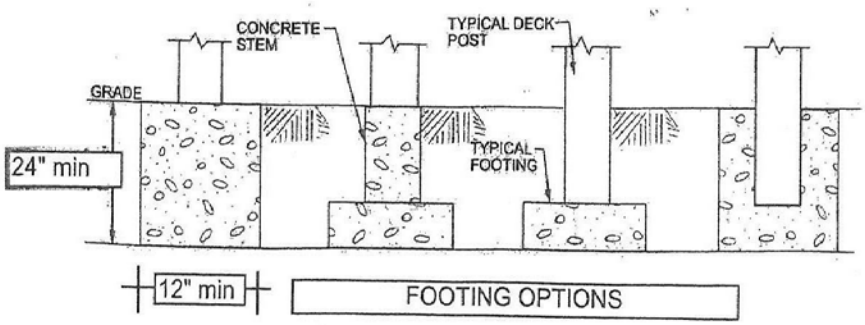

FOOTING OPTIONS